Data Sheet

Article number: 23017721114K
Description: E+G Handwheel
VR.125 FP-A14-K

Measures

VR.FP-A

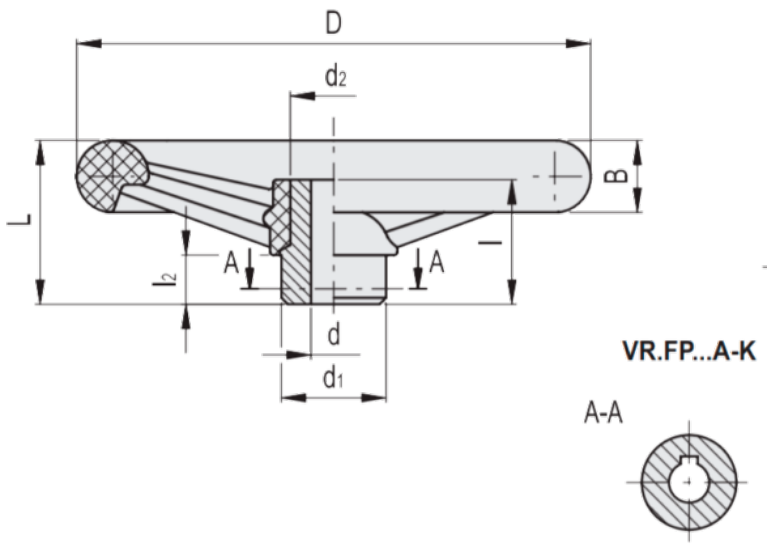

B	= 18	l	= 36
b	= 5	L	= 45
C (N*m)	= 120	L (J)	= 8
D	= 124	l2	= 12
d1	= 24	t	= 16.3
d2	= 20		
d\\\'	=		
d\\\'\\\'	=		

Product drawings and brochures of any kind may contain errors for which Brd. Klee A/S cannot be liable.